Repair Parts

8452-TE64VPABCP

CHICAGO FAUCETS
Geberit Group

Base Parts:

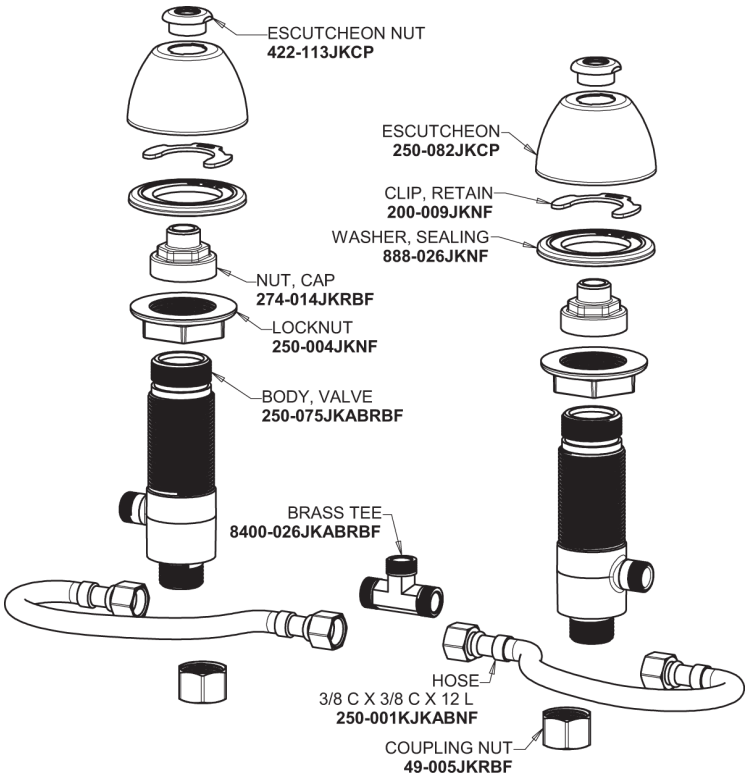

Spout for 8450 Series
8450-SPOUT

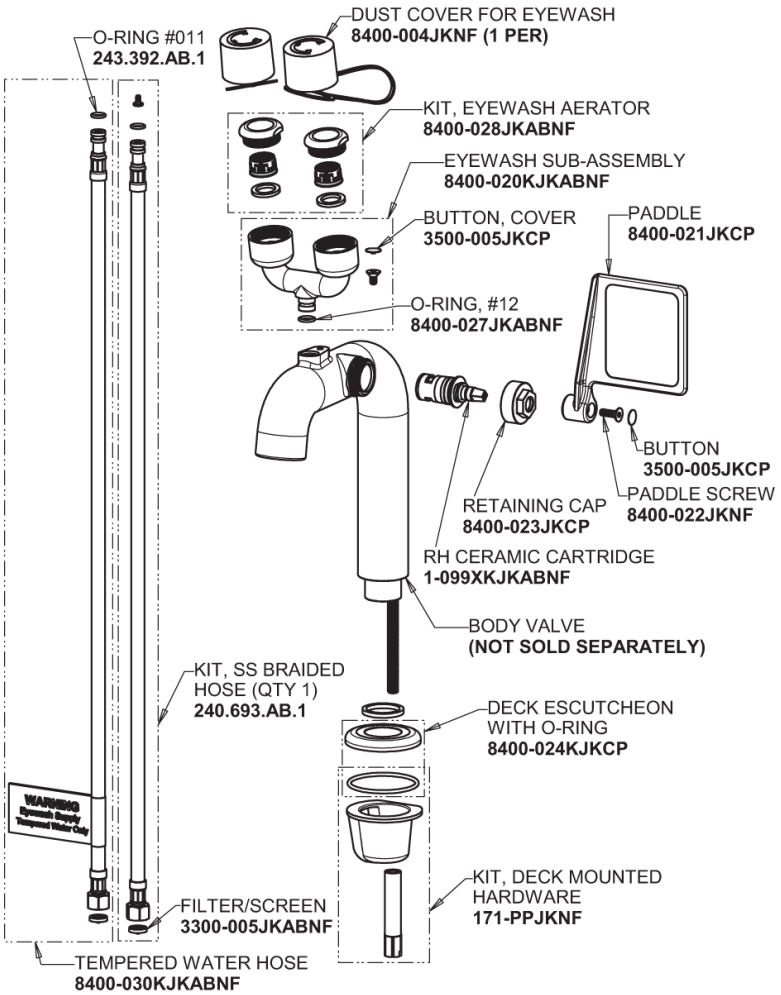

Adapter for 8450 Series
8400-025JKABRBF

1.0 GPM (3.8 L/min) Vandal Proof Non-Aerating Laminar Outlet
E64VPJKABCP

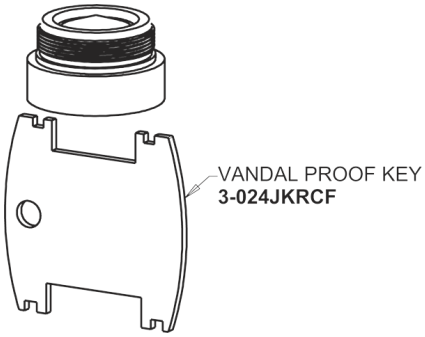

For Technical Assistance:

Phone: 800-TEC-TRUE (832-8783)
Email: techsupport.us@chicagofaucets.com

2100 South Clearwater Drive
Des Plaines, IL 60018
Phone: 847-803-5000
chicagofaucets.com

Repair Parts

8452-TE64VPABCP

CHICAGO FAUCETS
Geberit Group

Thermostatic Mixing Valve
132-LFSTABNF

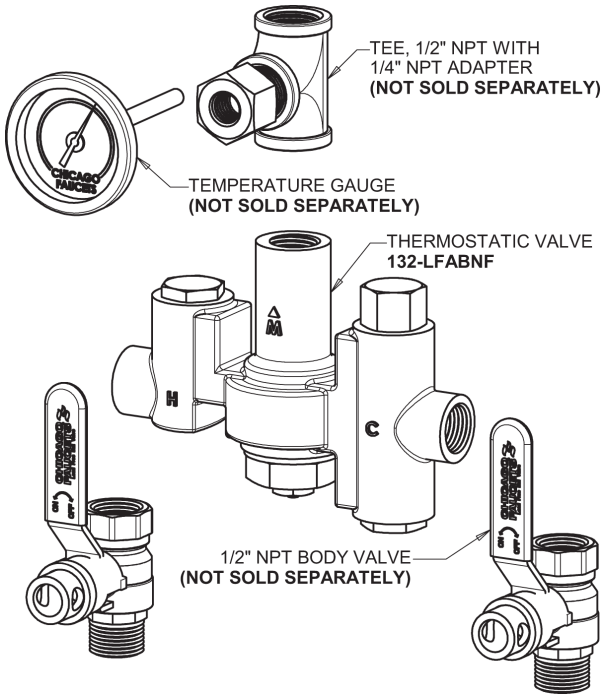

4" Wristblade Handle
317-PRJKCP

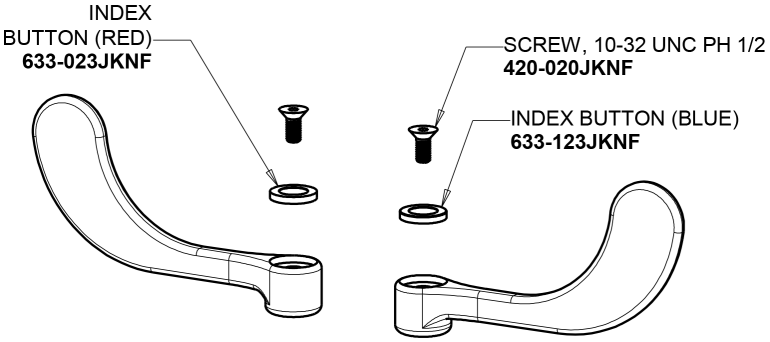

Quaturn Compression Cartridge (pair)
377-XTRHJKABNF (right)
377-XTLHJKABNF (left)

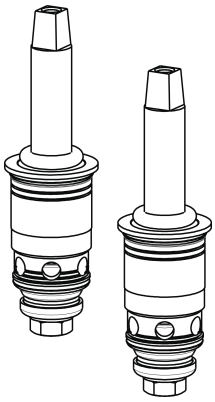

For Technical Assistance:

Phone: 800-TEC-TRUE (832-8783)
Email: techsupport.us@chicagofaucets.com

2100 South Clearwater Drive
Des Plaines, IL 60018
Phone: 847-803-5000
chicagofaucets.com